PENNCO

CAST IRON BOILERS

KEYSTONE

Oil-Fired Water Boilers

SYSTEM FEATURES

- **High Efficiency -** The Keystone water boiler is capable of reaching 86.4% efficiency as certified by test procedures prescribed by the US Department of Energy.
- **Cast Iron Sections and Push Nipples -** The Keystone's wet base designed heat exchanger is constructed of heavy-duty cast iron sections and sealed with cast iron push nipples.
- **Beckett Oil Burner -** The Keystone comes standard with the highly efficient Beckett AFG burner.
- **Tankless Heater Coil (optional) -** 5 gallon per minute tankless heater coil provides domestic hot water for your home needs. (Domestic hot water output varies upon BTU capacity of boiler)
- **Flame Inspection/Clean Out Port -** 2" cast iron teardrop provides easy access for flame inspection and accommodates snorkel vacuuming for cleaning.
- **Steel Jacket -** Finished in attractive gray enamel, the Keystone jacket is insulated to eliminate heat loss during off cycles.
- **American Made -** Pennco boilers are made in the United States by American craftsmen.

INSTALLATION INSTRUCTIONS

These instructions must be affixed on or adjacent to the boiler

Pennco Box 223 Clarendon, PA 16313

(814) 723-8371 Fax: (814) 723-7668

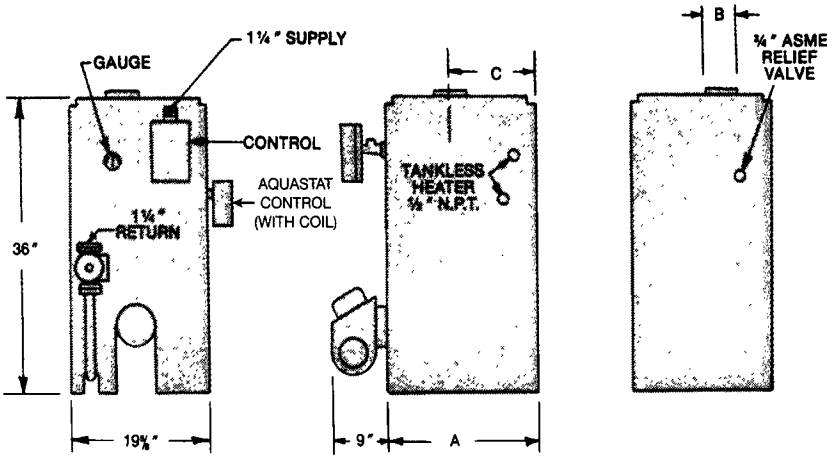

KEYSTONE WATER

OIL-FIRED HOT-WATER BOILERS — RATINGS & CAPACITIES

Model No. with Tankless Coil	Model No. without Tankless	No. of Sec.	Input * MBH	** Heating Capacity * MBH	Net I=B=R Rating * MBH	Firing Rate † GPH	Tankless Heater Capacity †† GPM	Chimney Size	DIMENSIONS (INCHES) A	B	C	A.F.U.E. †††	Approx. Shipping Weight
3K.60C	3K.60	3	84	74	64	.60	2.85	8x8x15	17¾	6	9¾	86.1	500
3K.75C	3K.75	3	105	92	80	.75	3.00	8x8x15	17¾	6	9¾	85.6	500
3K1.00C	3K1.00	3	140	120	104	1.00	3.25	8x8x15	17¾	6	9¾	84.4	500
4K.90C	4K.90	4	126	11	97	.90	3.15	8x8x15	21	6	11⅜	86.4	580
4K1.25C	4K1.25	4	175	153	133	1.25	3.50	8x8x15	21	6	11⅜	85.9	580
4K1.50C	4K1.50	4	210	181	157	1.50	3.75	8x8x15	21	6	11⅜	85.1	580
5K1.20C	5K1.20	5	168	147	128	1.20	3.45	8x8x15	24¼	6	13	86.1	680
5K1.75C	5K1.75	5	245	210	183	1.75	4.00	8x8x15	24¼	6	13	84.8	680
5K2.00C	5K2.00	5	280	239	209	2.00	4.25	8x8x20	24¼	6	13	84.0	680

* MBH = 1,000 BTU PER HOUR BTU = BRITISH THERMAL UNIT

** HEATING CAPACITY BASED ON 13% CO2 WITH A Ñ0 02Î W.C. DRAFT OVER FIRE, AND A #1 SMOKE OR LESS TESTING WAS DONE IN ACCORDANCE WITH THE D.O E. (DEPARTMENT OF ENERGY) TEST PROCEDURE

† GPH = GALLONS PER HOUR OIL AT 140,000 BTU PER GALLON

†† GALLONS OF WATER PER MINUTE, HEATED FROM 40° TO 140°, WITH 200° BOILER WATER TEMPERATURE, INTERMITTENT DRAW.

††† A.F.U E. = ANNUAL FUEL UTILIZATION EFFICIENCY BASED UPON D.O.E TEST PROCEDURE.

★ AS AN ENERGY STAR PARTNER, DUNKIRK HAS DETERMINED THAT THIS PRODUCT MEETS ENERGY STAR GUIDELINES FOR ENERGY EFFICIENCY.

As an ENERGY STAR® partner, Dunkirk Radiator has determined that this product meets the ENERGY STAR® guidelines for energy efficiency

KEYSTONE WATER BOILER STANDARD EQUIPMENT

- Assembled boiler with insulated jacket
- Combination high limit control and circulator relay, on boilers without optional tankless heater coil
- Combination high limit control, low limit control and circulator relay, on boilers with optional tankless heater coil
- Target wall (vacuum formed refractory ceramic fiber)
- Combination pressure/ temperature gauge
- Barometric draft control 6"
- 1 1/4" Grundfos (or Taco) circulator pump
- 3/4" boiler drain valve
- 30 lb. ASME relief valve
- Completely installed and wired Beckett AFG series oil burner equipped with nozzle and Honeywell R8184 or R4184 protectorelay primary control and Honeywell C554 Cad Cell

- The ratings marked "Net I=B=R Ratings" indicate the amount of remaining heat input that can be used to heat the radiation or thermal units. The Net I=B=R Ratings shown are based on an allowance of 1.15 in accordance with the factors shown in the I=B=R Code as published by The Hydronics Institute.
- Selection of boiler size should be based upon "Net I=B=R RATING" being equal to or greater than the calculated heat loss of the building.
- The manufacturer should be consulted before selecting a boiler for installations having unusual piping and pick-up requirements. Specifications and dimensions are subject to change without notice.
- These boilers are constructed and hydrostatically tested for a maximum working pressure of 50 psi in accordance with A.S.M.E. (American Society of Mechanical Engineers) Boiler and Pressure Vessel Code Section IV Standards for cast iron boilers. They are capacity rated in accordance with the code of the Hydronics Institute.

PENNCO Box 223, Clarendon, PA 16313 • Phone: (814) 723-8371 • Fax: (814) 723-7668

before you start

Check to be sure you have the right size boiler before starting the installation (see page 2). In most cases this will be the same size as the one you are replacing. Check the rating plate on the front of the boiler.

The following steps are all necessary for proper installation and safe operation of your boiler. You must see that the boiler is supplied with the proper oil, fresh air for combustion, and a suitable electrical supply. Also, the boiler must be connected to a suitable chimney and an adequate piping system. Finally, a thermostat, properly located, is needed for control of the heating system. If you have any doubts as to the various requirements, check with local authorities and obtain professional help where needed. The FINAL CHECK & ADJUSTMENTS starting on page 12 are vital to the proper and safe operation of the heating system. Take the time to be sure they are all done.

Steps necessary for proper installation and safe operation:

1. LOCATING THE BOILER
2. OIL SUPPLY AND PIPING
3. FRESH AIR FOR COMBUSTION
4. PIPING CONNECTIONS
5. CHIMNEY & VENT PIPE CONNECTIONS
6. ELECTRICAL WIRING
7. THERMOSTAT LOCATION
8. FINAL CHECKS & ADJUSTMENTS

locating the boiler

If your boiler is part of a planned heating system, locate it as nearly as possible where shown on your plan. If boiler is to be part of an existing system, it is usually best to put it where the old one was. If you plan to change location, you will need additional materials as well as an adequate base. The following rules apply:

1. The boiler must be level.
2. Use a raised base if the floor can become wet or damp.
3. The vent pipe connection should be short. The center of the chimney opening must be at least 52" above the floor on which the boiler stands.
4. Maintain clearances for fire safety as well as servicing. See Fig. 2 for boiler minimum clearances.

   18" clearance must be maintained at a side where passage is required for access to another side for cleaning or servicing, inspection or replacement of any parts that normally may require such attention. Boilers must be installed at least 12" from combustinble material on all sides. Allow at least 24" front and right side for servicing.
5. FRESH AIR for combustion must be available at the front of the boiler. FRESH AIR for ventilation must be available to the front AND rear of the boiler. If the enclosure is small (like a closet), provide two openings: one 6 in. below ceiling and one 6 in. above floor. If larger (like a utility room) but closed off, provide at least one opening. Openings should preferably be to outside (by duct or grille), but may be into the living area if this is not tightly weather stripped or vented by an exhaust fan. Area of each opening must equal 150 sq. in. for each GPH of burner firing rate. Air passages must be free of obstructions at all times. Ventilating and combustion air must enter boiler room without restrictions.
6. The floor supporting the boiler must be non-combustible. If it is combustible, place the boiler on 2" concrete patio blocks. The blocks must be under the entire boiler to protect the floor.
7. Be sure installation is in accordance with the requirements of the local authorities having jurisdiction. Compliance with these regulations is required.

FIG. 2 DIMENSIONS MIN. CLEARANCES

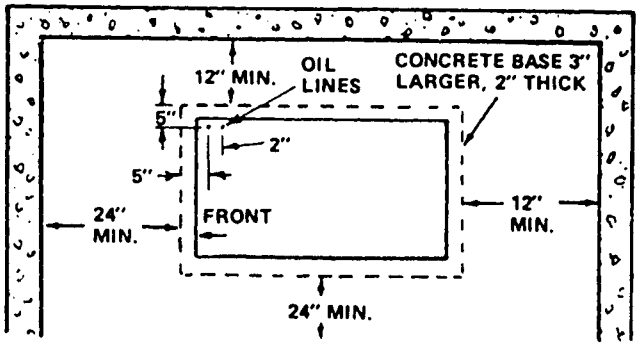

THIS UNIT MUST BE SET ON A CONCRETE OR OTHER NON-COMBUSTIBLE MATERIAL BASE OR FLOOR.

installation requirements

FIG. 3

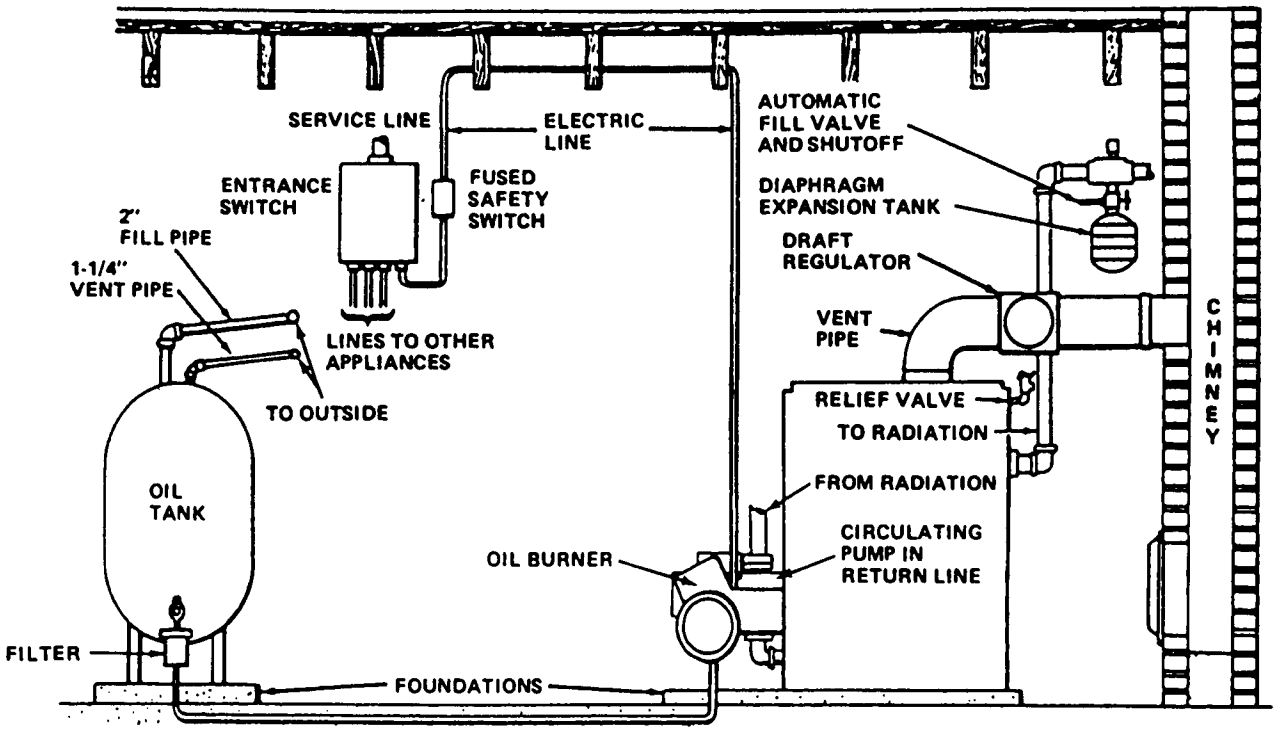

GENERAL PRINCIPAL REQUIREMENTS FOR A TYPICAL INSTALLATION

fresh air for combustion

WARNING

BE SURE TO PROVIDE ENOUGH FRESH AIR FOR COMBUSTION.

You must provide for enough fresh air to assure proper combustion. The fire in the boiler uses oxygen. It must have a continuous supply. The air in a house contains only enough oxygen to supply the burner for a short time. Outside air must enter the house to replace that used by the burner. Study following examples 1 and 2 to determine your fresh air requirements.

EXAMPLE 1. BOILER LOCATED IN UNCONFINED SPACE

A. If your boiler is in an open area in a conventional house, the air that leaks through the cracks around doors and windows will usually be adequate to provide air for combustion.

B. When the boiler is in a building of tight construction where the windows are weather-stripped, air for combustion and ventilation must be obtained from outdoors by means of an air intake. See example 2, paragraph B.

EXAMPLE 2. BOILER LOCATED IN CONFINED SPACE

A. When the boiler is in a closet or utility room, install two open grilles in a wall or door opening to the rest of the house. One grille is to supply combustion air. Locate it near the floor. The other grille is for ventilation. Locate it close to the ceiling. Each grille must have a FREE (actual open) area of not less than one square inch for each 1000 Btu/Hr of the total input rating of all the appliances in the confined space.

EXAMPLE: Your boiler is rated at 100,000 Btu per hour. The water heater is rated at 30,000 Btu per hour. The total is 130,000 Btu per hour. You need

two grilles, each with 130 square inches of FREE opening. Metal grilles have about 60% FREE area. To find the louvered area needed, multiply the FREE area required by 1.7. 130 x 1.7 = 221.0 sq. in. louvered area. In this example two grilles, each having an 8" x 30" (240 sq. in.) louvered area would be used. Fig. 4 shows the grille locations.

B. If the house is of tight construction with weather-stripped windows, not enough outside air will enter for safe combustion. Install a duct or pipe from a point near the burner, to a ventilated attic or crawl space or the outside where fresh air is freely available. The duct should have a net free area of 1 square inch for each 5,000 Btu per hour of all appliances. Screen the openings to keep animals or birds from entering. Refer to Fig. 6. Fig. 4 shows the Btu per hour capacities of ducts with several screening methods.

NOTE

If you use a fireplace or a kitchen or bathroom exhaust fan, you should install an outside air intake, see example 2B. These devices will rob the boiler and water heater of combustion air.

WARNING

Enough air insures proper combustion and ASSURES THAT NO HAZARD WILL DEVELOP DUE TO THE LACK OF OXYGEN.

FIG. 4 AIR OPENINGS FOR CLOSET OR UTILITY ROOM INSTALLATIONS

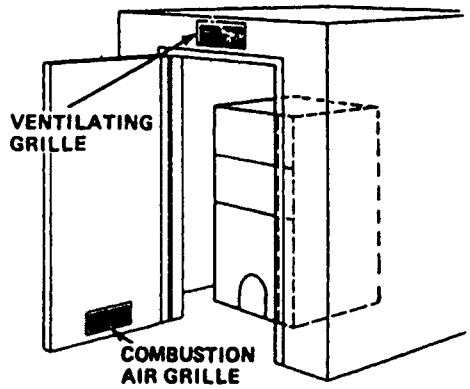

FIG. 5 FRESH AIR DUCT CAPACITIES

Fresh Air Duct Capacities for Ducts Supplying Fresh Air to boiler in tightly constructed houses. BTU per hour Input*.

FRESH AIR DUCT SIZE	¼" MESH SCREEN BTU	WOOD LOUVERS BTU	METAL LOUVERS BTU
3¼" x 12"	144,000	36,000	108,000
8 " x 8"	256,000	64,000	192,000
8 " x 12"	384,000	96,000	288,000
8 " x 16"	512,000	128,000	384,000

*Based on opening covered by ¼" mesh screen, wood louvers, or metal louvers.

FIG. 6 FRESH AIR DUCT FOR TIGHTLY SEALED HOUSE

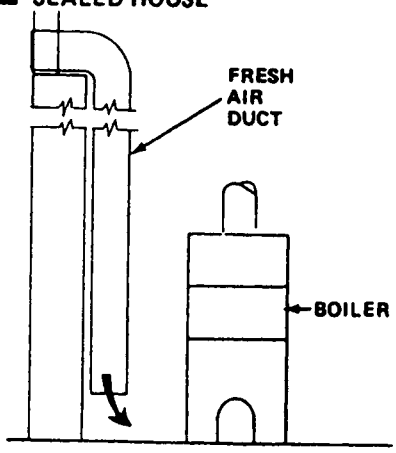

to install tankless heater coil

The use of this coil eliminates the need for a hot water storage tank. Instantaneous heating of water in the coil will provide a flow of hot water for domestic use — if proper water supply line controls are used.

IMPORTANT

Do not use a tankless coil if your water is excessively hard with lime or other deposits which will accumulate inside the coil.

1. Unpack coil, gasket, flow control and tempering valve. Be sure all the parts are in good order.
2. Drain boiler and system.
3. Remove jacket cover panel.
4. Remove screws holding cover plate and gasket. Remove cover plate and gasket and discard.
5. Place gasket over the coil and up against inside face plate. Insert coil into boiler opening. Be sure arrow stamped in the face plate points upward and the word "TOP" (if shown) is at the top. Replace the ten 3/8" × 3/4" hex head cap screws. Tighten evenly and snugly. Do not exert extreme pressure and snap the bolts.
6. Re-install the jacket panel.
7. Set limits as per instruction sheet with control.
8. Fill boiler and system.

FIG. 7

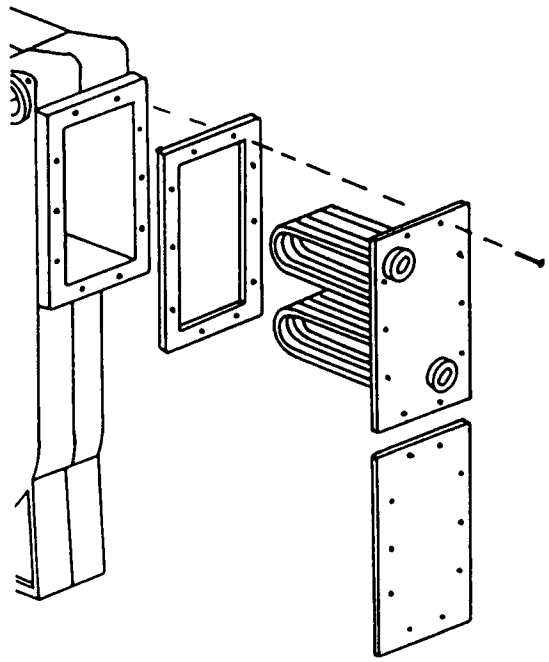

installation-system piping

1. Place boiler in the selected location (as near flue as possible). (Refer to Figure 3).

   Your boiler is shipped assembled. You need only to install the relief valve.

2. Install Relief Valve in rear section. Connect a drain line of the same pipe size (3/4") to carry any water to a drain.

Connect Supply and Return Lines to boiler. The connections may require certain additional fittings and parts, as shown on diagram (Figs. 8, 9 & 10).

If you are replacing an old boiler with this new one, possibly all you will need do is to connect the existing piping to your boiler, and install the Relief Valve.

If you are installing an entire new heating system, first install all of your radiation units (panels, radiators or cabinets) and the Supply and Return Mains — then make the connections at the boiler.

In connecting the cold water supply to the reducing valve, make sure that a clean water supply is available. When the water supply is from a well or pump, a sand strainer must be installed at the pump.

When boiler is used in connection with refrigeration systems it shall be installed so that the chilled medium is piped in parallel with the heating boiler with appropriate valves to prevent the chilled medium from entering the heating boiler.

FIG. 8

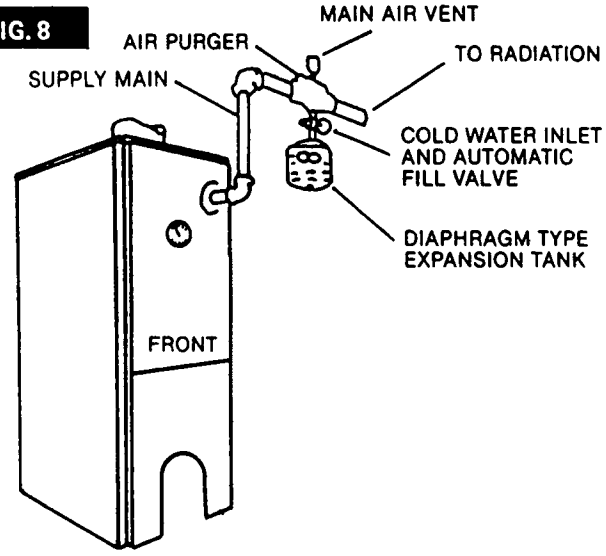

FIG. 9 FORCED HOT WATER TYPICAL PIPING WITH ZONE CONTROL VALVES

TYPICAL ZONE CONTROL CONNECTIONS

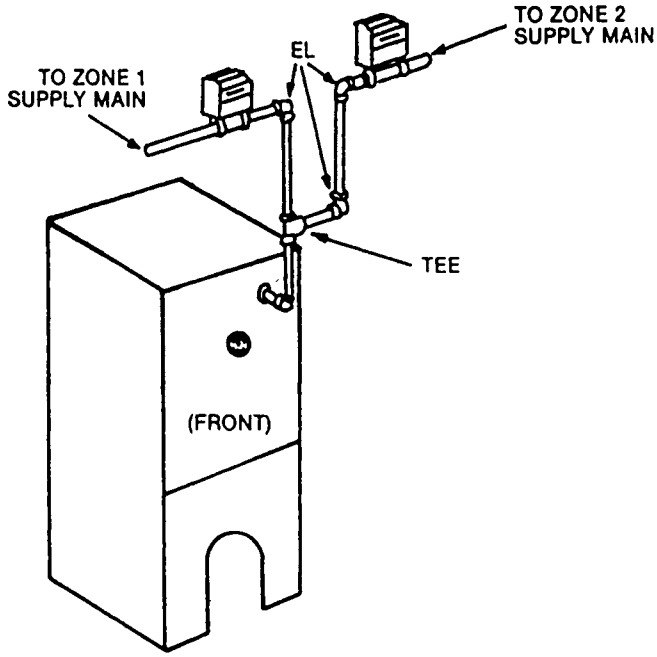

FIG. 10 PIPING ARRANGEMENTS FOR BOILER WHEN USED IN CONNECTION WITH REFRIGERATION SYSTEM

VALVES A & B – OPEN FOR HEATING; CLOSE FOR COOLING
VALVES C & D – CLOSE FOR HEATING; OPEN FOR COOLING

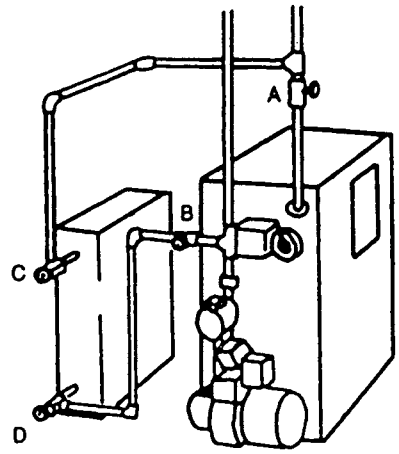

chimney and vent pipe connection

YOUR CHIMNEY

Your chimney is a very important part of your heating plant. No boiler, however efficient its design, can perform satisfactorily if the chimney that serves it is inadequate. Check your chimney to make certain that is is the right size, properly constructed and in sound condition.

It is cheaper to rebuild a poor chimney than to pay excessive fuel bills. If yours is an old masonry chimney, a new steel liner or a new prefabricated chimney may be the best solution.

MINIMUM CHIMNEY SIZE

NOZZLE SIZE (Gals. per Hr.)	FLUE HT. (In Feet)	FLUE AREA (In In.)
1.00 to 1.25	15	8 × 8
1.25 to 1.75	20	8 × 8
1.75 to 2.00	25	8 × 8

If your home is located more than 2,000 ft. above sea level, add 3-ft. to chimney heights. (Refer to Figure 11.)

VENT PIPE AND DRAFT REGULATOR

Your boiler requires 6" dia. vent pipe on 4 and 5 section, 5" dia. pipe on 3 section. You must also use a draft Regulator. It is included in the accessory package. Properly installed, the regulator will control the draft automatically. It is better to install it in a horizontal section of the pipe; but it may be in an angled or vertical section. Just make certain that the "top" is at top - and that the short pipe section which holds the Vane is horizontal. Install it as close as practicable to the boiler.

To install the vent pipe run, start at the boiler with a vertical pipe and then an elbow - then install the draft regulator next, making it horizontal. When the regulator is in place, start at the chimney and work back to the regulator. Join the two sections with a Drawband. The horizontal pipe must slope up toward the chimney at least 1/4 inch per foot. It must not leak and must be firmly supported. Join sections with at least two sheet-metal screws. Support every second section with stovepipe wire.

MINIMUM VENT PIPE CLEARANCE

Wood and other combustible materials must not be closer than 18" from any surface of the vent pipe.

FIG. 11

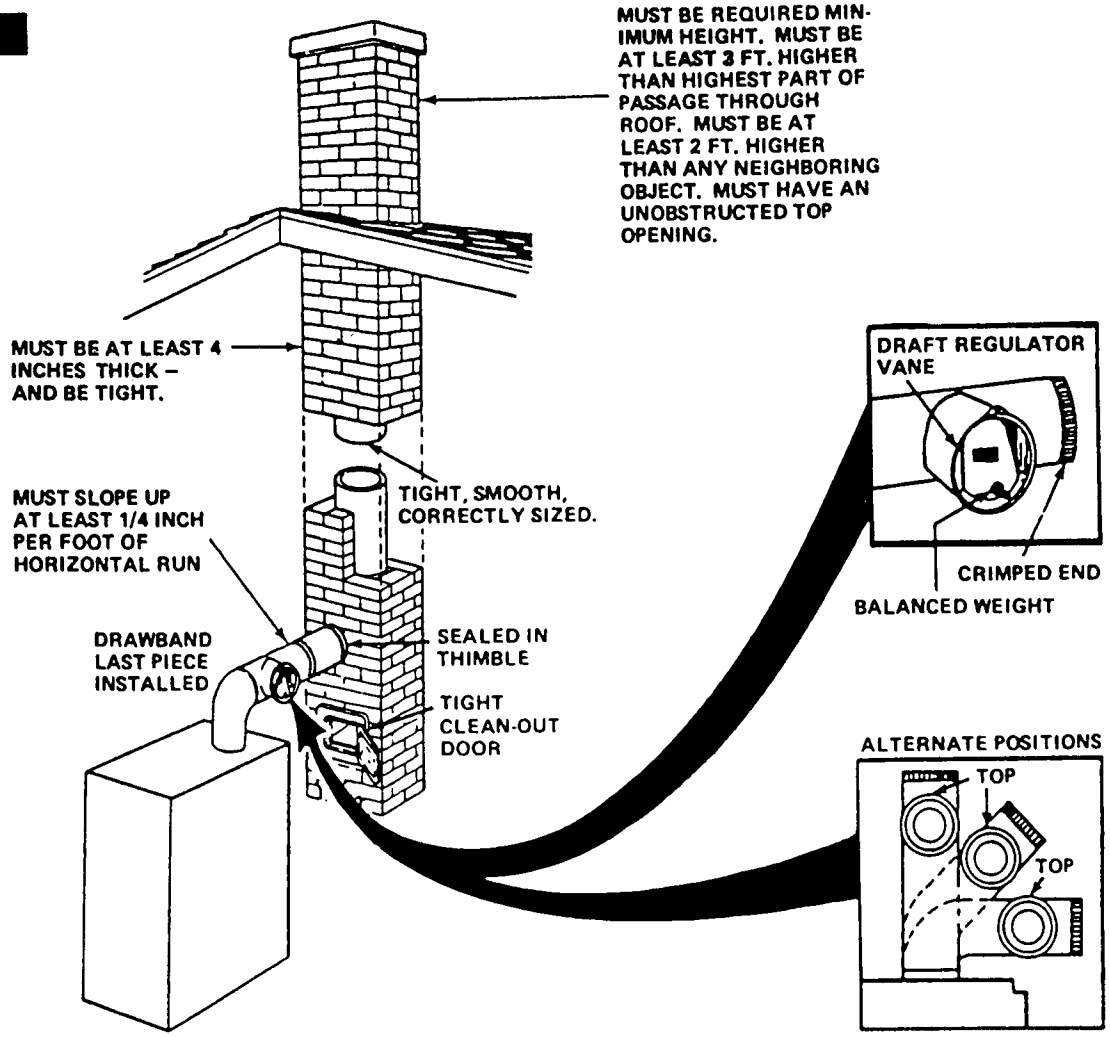

electrical wiring

INSTALL YOUR THERMOSTAT (not provided)

The thermostat location has an important effect on the operation of your boiler system. BE SURE TO FOLLOW THE INSTRUCTIONS INCLUDED WITH YOUR THERMOSTAT.

GROUNDING

Permanently ground your boiler according to local codes and the National Electrical Code. Run a 14 gauge or heavier copper wire from the boiler to a grounded connection in the service panel or a properly driven and electrically grounded ground rod.

ELECTRIC POWER SUPPLY

WARNING

TURN OFF ELECTRIC POWER AT FUSE BOX BEFORE MAKING ANY LINE VOLTAGE CONNECTIONS. FOLLOW LOCAL ELECTRICAL CODES.

All electrical work must conform to your local codes as well as the National Electrical Code. If you are not familiar with wiring and codes in general, have a competent electrician do this job.

The boiler controls are all wired at the factory. You need only connect a 115 volt electric supply and the thermostat wires to the relay Hot Water Control on the front of the boiler.

Run a separate circuit from a separate fuse in your electrical service entrance panel. This should be a 15 ampere circuit. Locate a shut-off switch at the boiler. It must be turned OFF during any maintenance. Solder and tape or securely fasten these connections with wire nuts.

CONNECTING 115 ELECTRIC WIRING TO BOILER

Connect the 115 volt electric supply wires to terminals L1 and L2 on the relay (Fig. 12).

THERMOSTAT CONNECTIONS

The two wires from the thermostat connect to terminals T and T on the relay.

FIG. 12

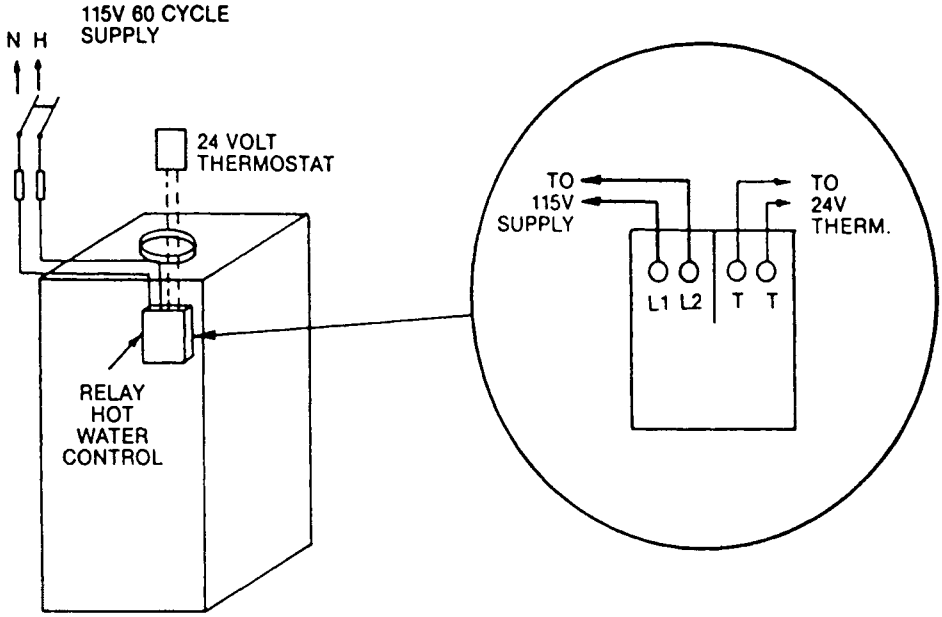

accessories-what they do

RELIEF VALVE

You must have a relief valve on your boiler. Water expands as it is heated. If there is no place for the water to expand into, water pressure will build up inside the boiler and system. Should this happen, the Relief Valve will automatically open at a pre-determined pressure. This will relieve the strain on the boiler and system. Run a pipe from the relief valve outlet (pipe must be same size as outlet and open end must not be threaded) to an open drain, tub or sink, or other suitable drainage point not subject to freezing. Failure to do so may cause water damage or injury should relief valve release. Do not cap off the drain line from this valve!

EXPANSION TANK

In a properly assembled system, the expanding water flows into an Expansion Tank. This tank should be of the correct size.

The tank is filled with air. As the water expands it compresses the air in the tank to form an air pressure cushion. This "spring-like" cushion serves to maintain correct operating water pressure regardless of water temperature. This assures a "full measure" of water, even in the highest radiation unit of the system. It also prevents blowing off of the relief valve.

The air in the tank in the beginning (with system filled with cold water) is sufficient for proper operation. The tank also serves as a trap for excess air in the system. The air would cause gurgling in the pipes and inefficient circulation in the radiators if left in the system.

It is possible for a tank to become "water-logged" (filled with water). It can also become overfilled with air. This can happen after filing the system with new water. Fittings provided on the tank and in the line to the tank are for bleeding off excess water or air.

When installing this tank, it is important: 1) That the tank be higher than the boiler top. 2) That the pipe to the tank continuously rises up to the tank (so that air can "bubble" up through it).

DIAPHRAGM TYPE EXPANSION TANK

The Diaphragm Type Expansion Tank (EX-TROL takes the place of the conventional expansion tank. Carefully read the instructions packed with your EX-TROL Tank Assembly.

The EX-TROL Tank comes to you with a 10-12 pounds per square inch air charge. This is the same as the pressure produced in the system by the automatic fill valve. When the system is first filled, the EX-TROL Tank will contain little or no water. As the water is heated its pressure increases. It expands into the EX-TROL Tank, compressing the air in the tank. This compressed air cushion permits the water in the system to expand as the temperature changes.

The Diaphragm Type tank can be mounted on the Air Purger fitting or at any other convenient place in the supply or return line.

AIR ELIMINATING FITTING (AIR PURGER)

An Air Purger is used to remove excess air from the system. It is installed in the supply line. It will eliminate air from the water before it reaches the radiators and bleed off this air.

MAIN AIR VENT FOR DOWN FLOW SYSTEMS OR DIAPHRAGM TYPE EXPANSION TANK

Before a system is filled with water, there is air in the pipes and radiation units. Some of it will be trapped as the system is filled. It is possible to eliminate most of this air through the air vents on the radiation units. A Main Air vent, will speed and simplify this. It should be installed on the highest point in the supply Main when all radiation is below top of boiler.

AUTOMATIC FILL VALVE

For safe, efficient operation, a hot water system must be filled with water. Adding new water, when needed can be done manually (by use of a hand valve in the water supply line). This requires regular attention to the system's needs. An Automatic Fill Valve accomplishes this without attention. It is installed in the Supply Line on hot water boilers only. The Valve operates through water pressure differentials. It does not require an electrical connection.

DRAIN VALVE

This manual valve provides a means of draining all water from the boiler and system. It is often installed in the 3/4" tapping at the bottom of the boiler section. Or it can be installed in a tee where the return line enters the boiler.

RELAY HOT WATER CONTROL

The water temperature limit control in the relay hot water control is adjustable and may be set as necessary. It may be set as low as 180°F or as high as 230°F. This depends on the type and amount of radiation involved and weather conditions.

CIRCULATING PUMP

Every Forced Hot-Water System requires a Circulating Pump. A separate pump or zone valve is required for each Zone, if you have a two or more Zoned System. This pump must have the capacity to provide the circulation required by your system. The pump is connected into the Return Main just ahead of the boiler. It is also wired to the electrical system.

starting your boiler

HOW A HOT-WATER SYSTEM OPERATES

Your entire heating system (boiler, piping and radiation units) is filled with water. As the water in the boiler is heated, it is pumped from the top of the boiler through the supply main to the radiation units. The cooler water in them flows back through the return main to the boiler. This provides positive and rapid response to the thermostat.

FILLING SYSTEM WITH WATER

Close the Air Vents on all radiation units. Open the Valves to these units. Make sure the boiler and Expansion Tank Drain Cocks are closed. The Air Bleed Screw on the tank Drain Fitting should be closed. Open the valve in the line from the boiler to the expansion tank. Open the water inlet to your boiler and leave it open. Start with the *lowest* radiation unit. Open the air vent on this unit. When all the air has escaped and water starts to flow from the vent, close it. Go to the next radiation unit, and repeat this process. Repeat until you have covered every radiation unit in the system (ending up at the highes' unit in the system). If your units have automatic vents, this manual venting is unnecessary but it will speed up the proper filling of your system.

NOTE

After filling — and before operating boiler — check all piping connections for leaks. Slight leaks (which often occur in a newly installed system) are no cause for alarm. They will usually plug themselves in a short time. Leaks which cause a steady trickle must be stopped, however, by tightening the joints.

If your system is a closed expansion tank system, you should have an Automatic Fill Valve. You may leave it open to refill the system automatically as needed. Check the temperature-pressure gauge. Note the position of the hand indicating pressure. This should be between 10 and 15 psi. Any lowering of this movable hand below 10 lbs. will indicate loss of water due to leakage. The automatic fill valve should compensate for this. If it does not, manually open this valve to refill the system until the hand is again pointing to the same pressure reading. Instructions are packaged with the valve.

operating your boiler

TO START

Fill entire system with water. Vent all air from system. Refer to the instructions included for the oil burner.

FUEL UNITS AND OIL LINES

The oil burner is provided with a single stage 3450 RPM fuel unit with the by-pass plug removed for a single pipe installation. This is satisfactory where the fuel supply is on the same level, or above burner, premitting gravity flow of oil. Never exceed 3 PSI pressure to the suction side of fuel unit. A pressure over 3 PSI may cause damage to the shaft seat and allow it to leak oil. When it is necessary to lift the oil to the burner, a return line should be run between fuel unit and oil supply. (If lift exceeds 10 feet, a two stage fuel unit must be used with a return line.) When a two line installation is made, the by-pass plug must be installed. This is supplied with the burner attached to fuel unit, along with an information pump data sheet in a plastic bag. When oil lines are installed continuous runs of heavy wall copper tubing is recommended. Be sure that all connections are absolutely air-tight. Check all connections and joints. Flared fittings are recommended. Do not use compression fittings. See pump data sheet for sizing, lift and length for tubing recommendations. Use an oil filter of adequate size for all installations. Install inside the building between the tank shutoff valve and the burner. For ease of servicing, locate the shutoff valve and filter near the burner.

AIR SUPPLY FOR COMBUSTION

Do not install in rooms with insufficient air to supply combustion. Occasionally, it is necessary to install windows or cut holes in a door to these rooms to obtain sufficient air and to prevent less than atmospheric air pressure in the room. If there is a lack of combustion air, the burner flame will be yellow and formation of soot will occur in the heating unit. In buildings of conventional frame, brick, or stone construction without utility rooms, basement windows, or stair doors, infiltration is normally adequate to provide air for combustion and for operation of the barometric draft control. For installation in an enclosed utility room with an outside wall, a fresh air opening to the outside should be made with a free cross sectional area of twice the area of the flue outlet or 100 square inches for each gallon nozzle size. (Example: 10 × 10 for 1.00 GPH.) For each 1,000 feet above sea level, increase the fresh air opening by at least four percent. The room should be isolated from any area served by exhaust fans. Do not install an exhaust fan in this room.

DRAFT REGULATORS

If a draft regulator is required, it should preferably be mounted in the smoke pipe. Use a draft gauge to adjust to proper opening. When the burner air supply and draft is properly adjusted, the combustion chamber draft will be approximately a negative 0.01" to 0.02" WC and the stack draft will be a negative 0.02" to 0.04" WC. The larger the installation, the greater the draft will be required at the stack to obtain the negative 0.01" to 0.02" WC at the combustion chamber.

NOZZLES

Use the proper size, type and spray pattern nozzle. To install nozzle, loosen clamping screw on the retention ring assembly and slide the assembly off the adapter. Install and tighten the nozzle in the adapter. Be careful not to damage the electrode insulators or bend the electrodes. Replace the retention ring assembly on the adapter. Make sure the clamp is tight against the shoulder on the adapter. Tighten the clamping screw. Check electrode setting.

FINAL ADJUSTMENTS

A final adjustment should be made by the use of a COMBUSTION TEST KIT. After operating ten minutes to warm up unit, a smoke tester should be used to take a smoke reading. Smoke test should read no greater than #1 (Shell Bacarach scale), and less than a #1 smoke is desired. At times, a new boiler requires more time than this to burn clean due to the oil film on the new heat exchanger. Recheck draft and take a CO_2 reading over the fire and in the stack. If a large differential between CO_2 readings is noted, air leakage is the most common cause. CO_2 readings must all be taken adead of draft control, if used. The CO_2 measured in the stack should be 13%. Units should be started and stopped several times to assure good operation. Check operation of limit controls and thermostat. Check for oil leaks. NOTE: ALL INSPECTIONS SHOULD BE REINSPECTED AFTER ONE OR TWO WEEKS OF NORMAL OPERATION.

This boiler burner unit is designed to run at 13% CO_2, #1 or less smoke, and −.02" WC draft over fire.

MAINTENANCE

OILING MOTOR — By proper oiling twice a year, the motor life will be increased. Only a few drops of non-detergent type oil at both motor holes are needed.

FILTER — The oil filter cartridge should be replaced once each year so the fuel oil will not become contaminated and plug up fuel pump and nozzle of oil burner.

NOZZLE — The nozzle should be changed at least once each year before the start-up of the heating season. Replace with proper nozzle.

COMPONENTS — If for any reason any of the burner parts have to be replaced, always use parts recommended by the manufacturer. Specify part numers and description when ordering. (IN ALL COMMUNICATIONS STATE BURNER MODEL AND SERIAL NUMBERS.)

ELECTRODE SETTINGS — This is very important for reliable ignition of the oil. Check these once a year in accordance with the instructions provided in this manual.

FAN AND BLOWER HOUSING — This must be kept clean, free of dirt and lint. Open transformer and off cycle damper to check fan blades from above. Be sure the electric power is off on burner when the transformer is opened up for this inspection.

checking and adjusting

If you have installed your own boiler, we recommend that you call for an inspection by a service technician. The peace of mind and assured performance are well worth the cost involved. He can quickly make the necessary checks and adjustments.

OIL BURNER ADJUSTMENT

Refer to your oil burner owners manual for checking and adjusting the burner.

ADJUST OPERATING CONTROLS

Instructions for each control are included with the controls. Use the following settings for the first adjustment.

Force Hot Water
Set limit control at 200°F

Refer to the instructions for the relay hot water control.

These settings can be changed after you have had some idea how the system works. **Example:** If your Forced Hot Water System does not give quite enough heat in very cold weather you can raise the limit setting to 220°F. Use the boiler gauge to check your settings. Make the adjustments according to its readings.

ADJUST THERMOSTAT ANTICIPATOR

SET HEAT ANTICIPATOR AT .4. INSTRUCTIONS FOR THE FINAL ADJUSTMENT OF THE THERMOSTAT ARE PACKAGED WITH THE THERMOSTAT.

Check thermostat operation. When set above temperature indicated on the thermometer, boiler burner should start. Make certain the thermostat turns off the boiler when room temperature reaches the selected setting and starts the boiler operating when room temperature falls a few degrees.

Finally, set the thermostat for the desired tempera ture. Special conditions in your home and the location of the thermostat will govern this setting.

system checks after first starting

These checks and adjustments pertain to the various controls and are to be made in accordance with instructions packaged with the controls.

Set the Thermostat for the desired room temperature. Next, adjust the Relay Hot Water Control, which regulates the temperature of the water in the boiler. The temperatures listed in the table (at right) have been found to be satisfactory for most installations. They can be varied if necessary, to suit the climate in which you live — but the boiler temperature should never be set for less than 180°F whatever type of radiation units you may have.

When the thermostat and Relay Hot Water control have been set, start the burner. Watch the Thermometer Gauge as the boiler warms up, and note the temperature at which it stabilizes. If this temperature is not the same as the dial reading on the limit control, readjust the control to obtain the desired thermometer indication. (Any difference between this gage and the control gage will be due to their different locations. Always use the thermometer gage when adjusting the controls, for it is the more accurate of the two.)

BOILER WATER TEMPERATURES	
Type of Heating Unit	*Limit Control Setting*
Standing Radiators	180°F
Baseboard and Convector Radiators	200°F-230°F

maintaining your boiler

RELIEF VALVE

This valve should open automatically when the system pressure exceeds the safe limit (30 lbs. per square inch). Should it ever fail to open under this condition, shut down your system. Drain it until pressure is reduced below the safe limit. Then have the valve replaced immediately.

EXPANSION TANK

As previously noted, this tank may become waterlogged, or may receive an excess of air. Frequent automatic opening of the relief valve indicates water logging. A high boiler temperature accompanied by unusually low radiation unit temperature (and "knocking") indicates excess air in tank.

To correct either condition, close the valve between the boiler and the tank. Drain the tank until it is empty. Check all the tank plugs and fittings. Tighten as necessary. Open the valve between the boiler and tank. Water will rise to the normal height in the tank if you have an automatic fill valve (otherwise, manually refill the system).

BOILER FLUE PASSAGES

Under normal operating conditions, with the burners properly adjusted, it should not be necessary to clean the boiler flue gas passages. However, to assure trouble-free operation, we recommend that you have the flue passages, burner adjustment, and operation of the controls checked *once each year* by a competent Service Technician.

WATER SYSTEM

If system is to remain out of service during freezing weather, always drain it completely (water left in to freeze will crack the pipes and/or boiler).

Before the start of each season (or whenever system has been shut down for some time) recheck the whole water system for leaks. Check the boiler and vent pipe for leaks. Replace or patch any boiler cement seals that are faulty.

KEEP YOUR BOILER, AND THE AREA AROUND IT CLEAN

NEVER BURN REFUSE OR ANY MATERIAL OTHER THAN THE SPECIFIED FUEL IN YOUR BOILER

HAVE YOUR BOILER CHECKED EACH YEAR BY AN EXPERIENCED SERVICEMAN

service hints

You may avoid inconvenience and service calls by checking these points before you call for service.

If your system is not heating or not giving enough heat:

Possible Cause	What to do
Thermostat is not set correctly.	Reset thermostat above room temperature
Boiler and/or Burner may be dirty.	a. Clean all flue passages and the vent pipe.
	b. Have burner cleaned and readjusted.
Burner may not be firing at proper rate.	a. Check nozzle size if there is any doubt.
	b. Have burner adjusted.
Burner may be short cycling.	a. Short cycling (too frequent off and on) of burner will cause sooting. If boiler and/or burner (1, above) become dirty at frequent intervals, after correcting the "dirt condition" also correct the control setting (or other cause of the short-cycling).
	b. Check thermostat heat anticipator and correct setting, if necessary, per instruction sheet.
No power to boiler	Check fuse. If blown, replace. Check to be sure power supply circuit is "ON".
Controls out of adjustment.	Reset according to instructions.
Radiators not heating	Open radiator vents to vent excess air. Check flow control valve (if used). It may be in closed position.
Circulating pump not running	Check relay operation.
Poor electrical contact.	Check all control terminals and wire joints.

If burner is noisy . . .

Possible Cause	What to do
Oil burner fan wheel may be dirty.	Clean fan wheel with a stiff brush and carbon tetrachloride. Readjust oil burner.
Draft regulator may be stuck.	Check to see if vane swings freely. Clean, if vane is stuck.

If radiators are noisy

Possible Cause	What to do
Air in system.	Open radiator vents to vent air. Check expansion tank

Relief Valve Leaking . . .

Possible Cause	What to do
Dirt on seat.	Open valve manually. Allow water to run and clear valve seat.
Water logged expansion tank.	Drain tank.

parts list

All parts listed in the following Parts Lists (and for which Part Numbers are given) may be ordered through your nearest supplier or from whom purchased or direct from the factory. Prices will be furnished on request; or parts will be shipped and billed at prevailing prices.

When ordering parts, first obtain the Model Number from the nameplate on your boiler. Then determine the Part No. (not the Key No.) and the Description of each part from the following appropriate illustration and list. Be sure to give us all this information!

The Part No. **The Part Description**
The Boiler Model No.

Parts for which no Part Numbers are given are standard hardware items which you can procure locally.

electrical wiring

BOILER WITH TANKLESS HEATER COIL

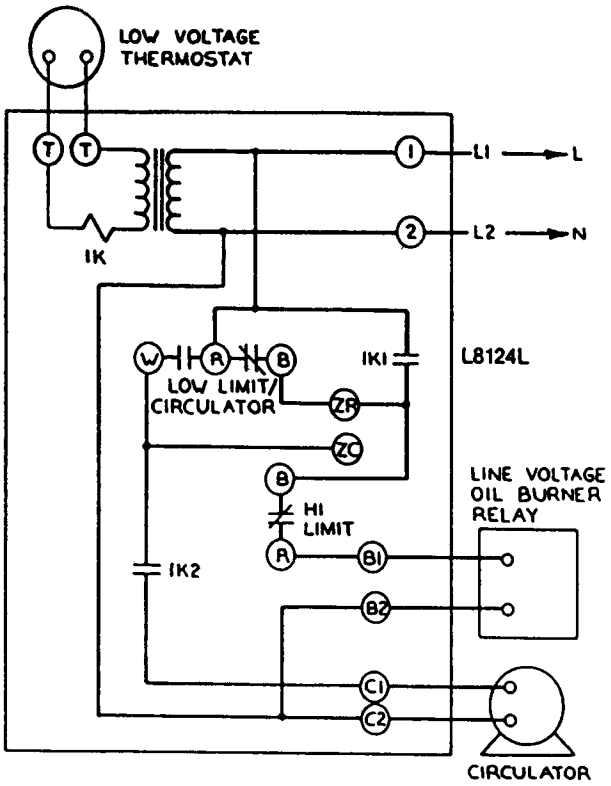

BOILER WITHOUT TANKLESS HEATER COIL

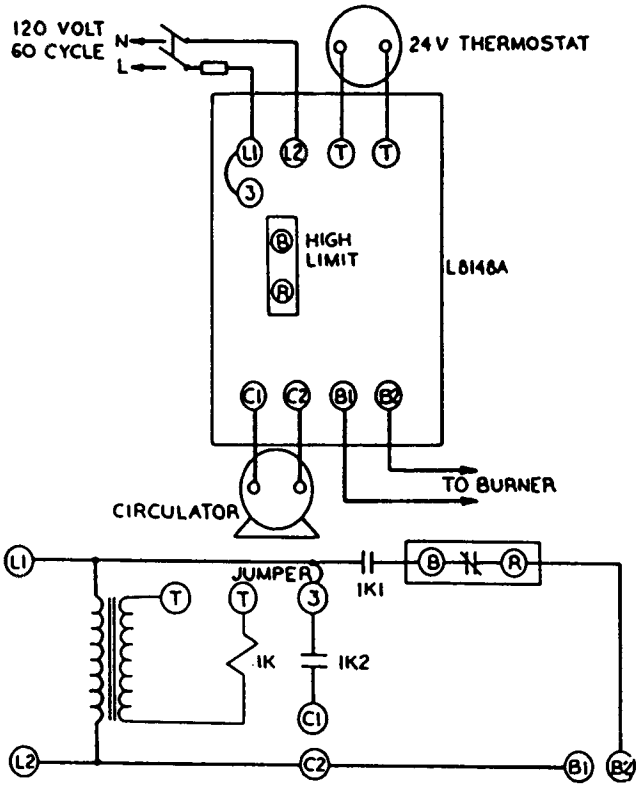

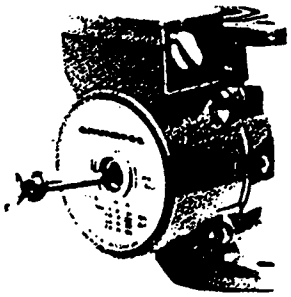

When the pump is first started, or at the beginning of each heating season, the shaft may rotate slowly until the water has penetrated the bearings. If the pump does not run, the shaft can be rotated manually. To accomplish this, switch off the electrical supply, and close the isolation valves on each side of the pump. Remove the indicator plug in the middle of the nameplate with a slot-type screwdriver. Insert a small slot-type screwdriver down into the end of the shaft and gently turn until the shaft moves freely. See photo. Replace and tighten the plug. Open the isolation valves and wait two to three minutes for the system pressure to equalize before starting the pump.

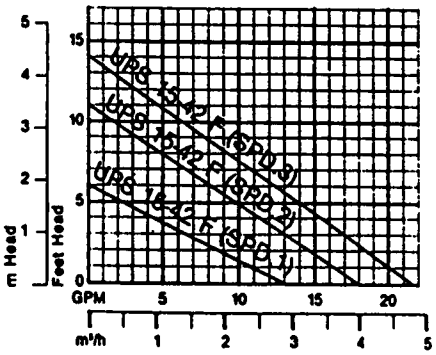

Model	Speed	Hp	Watts	Volts	Amps	RPM	Capacitor
UPS 15-42 F 3-Speed	3	1/20	95	115	0.85	2620	10MF/180V
	2	1/32	70	—	0.60	2300	—
	1	1/64	50	—	0.42	1800	—

repair parts

OIL-FIRED HOT WATER BOILERS

READ INSTRUCTIONS AT BOTTOM OF GE 14 BEFORE ORDERING PARTS

For Model Numbers, see table on page 2.

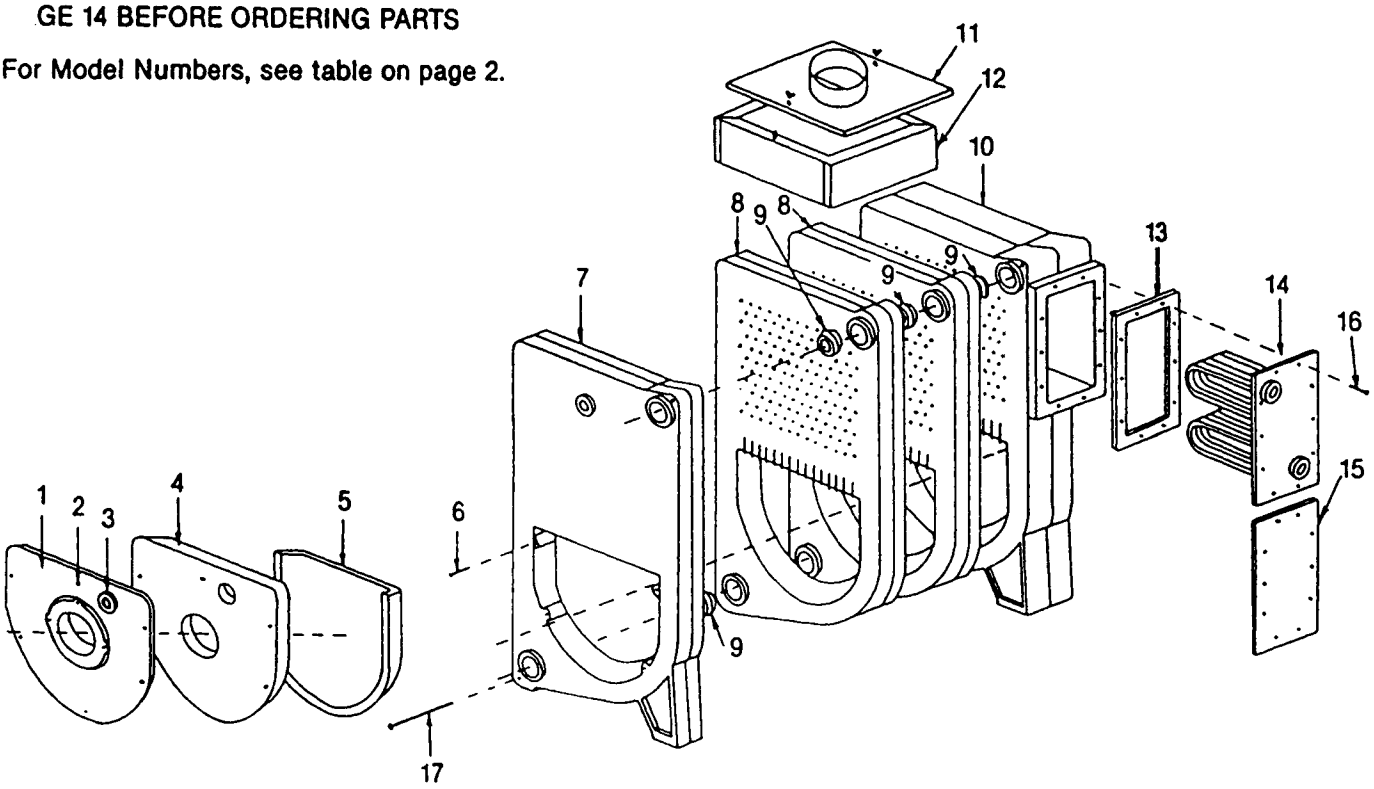

This is a Repair Parts List, NOT a Packing List

BOILER PARTS FOR ALL OIL-FIRED BOILERS

KEY NO.	MODEL NUMBERS			Description
	3E	4E	5E	
1	E-703	E-703	E-703	Fire Door
2	103865	103865	103865	⅛ Square Head Pipe Plug
3	E-704A	E-704A	E-704A	Sight Glass
4	E-704	E-704	E-704	Fire Door Insulation
5	E-705	E-705	E-705	Target Wall
6	103177	103177	103177	5/16-18 x 2" Stud (4 required)
7	E-700	E-700	E-700	Front Section
8	E-702	E-702	E-702	Intermediate
9	#3	#3	#3	Nipples 2"*
10	E-701	E-701	E-701	Rear Section
11	E-707	E-707	E-707	Hood and Collar
12	E-708 & 9	E-708 & 9	E-708 & 9	Collector Box
13	E-720	E-720	E-720	Gasket
14	CDB-E3.7	CDB-E3.7	CDB-E3.7	Tankless Heater Coil
15	E-719	E-719	E-719	Tankless Heater Cover Plate
16	122119	122119	122119	⅜-16 x ¾ Hex Head Cap Screw
17	10-¼"	13-½"	17"	¼" Tie Rods (2 required)

*Four are required for first intermediate replacement section and two for each additional section.

repair parts

OIL-FIRED HOT WATER BOILERS

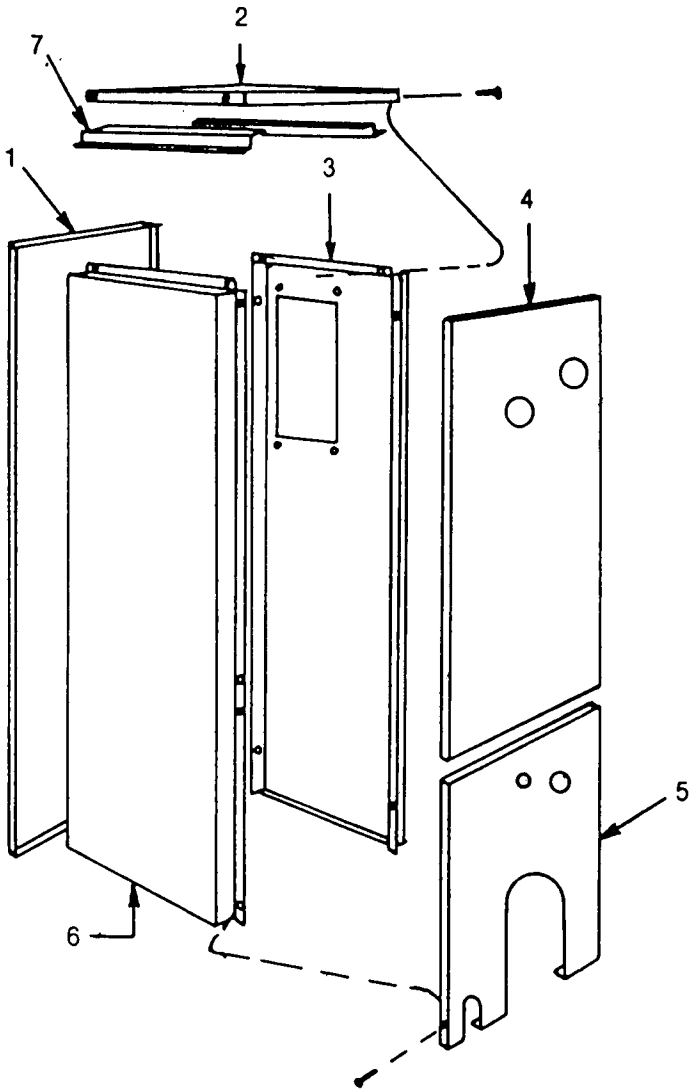

FLUSH JACKET PARTS

KEY NO.	MODEL NUMBERS			Description
	3E	4E	5E	
1	E-715	E-715	E-715	Back Panel
2	E-716	E-716	E-716	Top Panel
3	E-712	E-712	E-712	Right Side Panel
4	E-713	E-713	E-713	Upper Front Panel
5	E-714	E-714	E-714	Lower Front Panel
6	E-711	E-711	E-711	Left Side Panel
7	E-721	E-721	E-721	Z-Bars
†	415226	415226	415226	10 × ½ Sheet Metal Screw

†Not Shown

repair parts

OIL-FIRED HOT WATER BOILERS

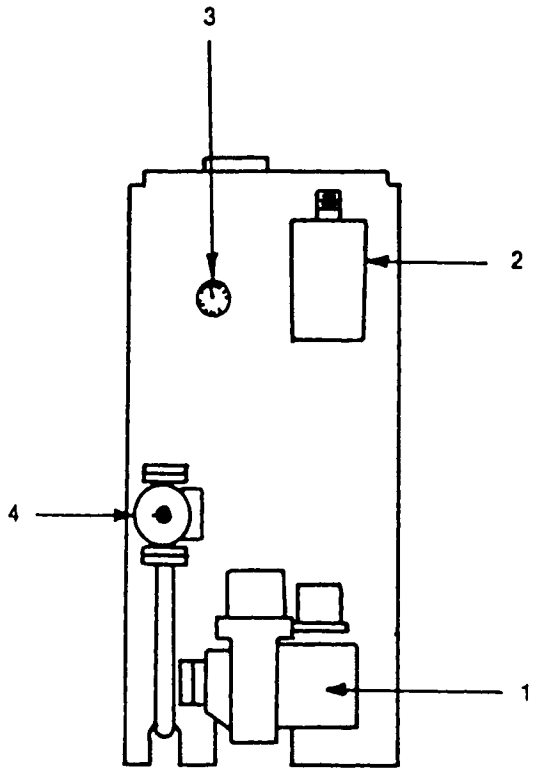

CONTROLS

KEY NO.	MODEL NUMBERS			Description
	3E	4E	5E	
1	127-029	127-029	127-029	Oil Burner. Primary Control & Cad Cell
1	AFG50MB	AFG50MD	AFG50MD	Oil Burner, Primary Control & Cad Cell
2	L8148A	L8148A	L8148A	Control without Tankless Heater
2	L8124L	L8124L	L8124L	Control with Tankless Heater
3	135-393	135-393	135-393	Gauge
4	UP15-TB2	UP15-TB2	UP15-TB2	Circulator
†	335	335	335	Relief Valve
†	7"A	7"A	7"A	Barometric Draft Control
†	31-606-04	31-0006-04	31-606-04	Drain Valve
†	1"-E	1"-E	1"-E	Flue Brush

†Not Shown

CLEANING INSTRUCTIONS

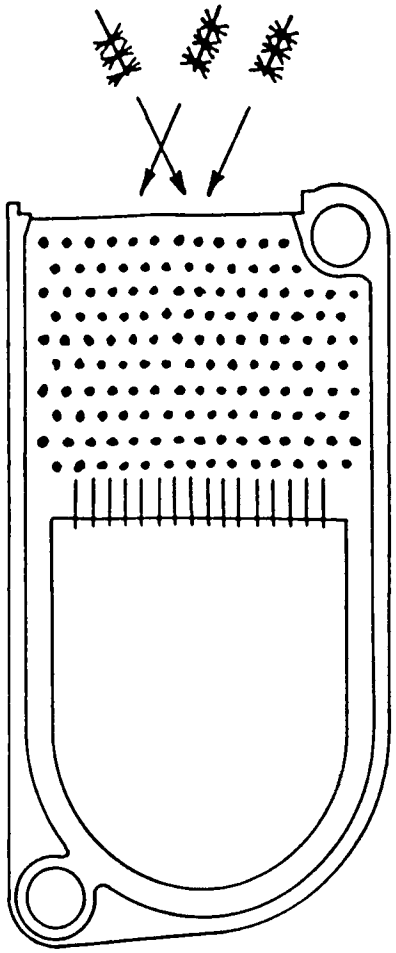

Step 1 - Remove the breeching connection to the boiler and remove the top jacket panel. Remove the flue collector cover by removing the two wing nuts which hold it down.

Step 2 - Remove soot by brushing flue surface *diagonally* through opening exposed in step 1.

Step 3 - Vacuum residue from chamber. The best way to do this is to remove the oil burner and carefully insert the vacuum hose into the chamber, then vacuum.

Step 4 - Reassemble boiler. Make sure that flue collector cover is properly sealed. Clean the base of the chimney and replace the breeching. Before leaving the job site, run a combustion test on the unit and make any adjustments needed to obtain the combustion characteristics in the combustion information chart.